ZIMBABWE ALLOYS LINEAR PROGRAMMING MODEL

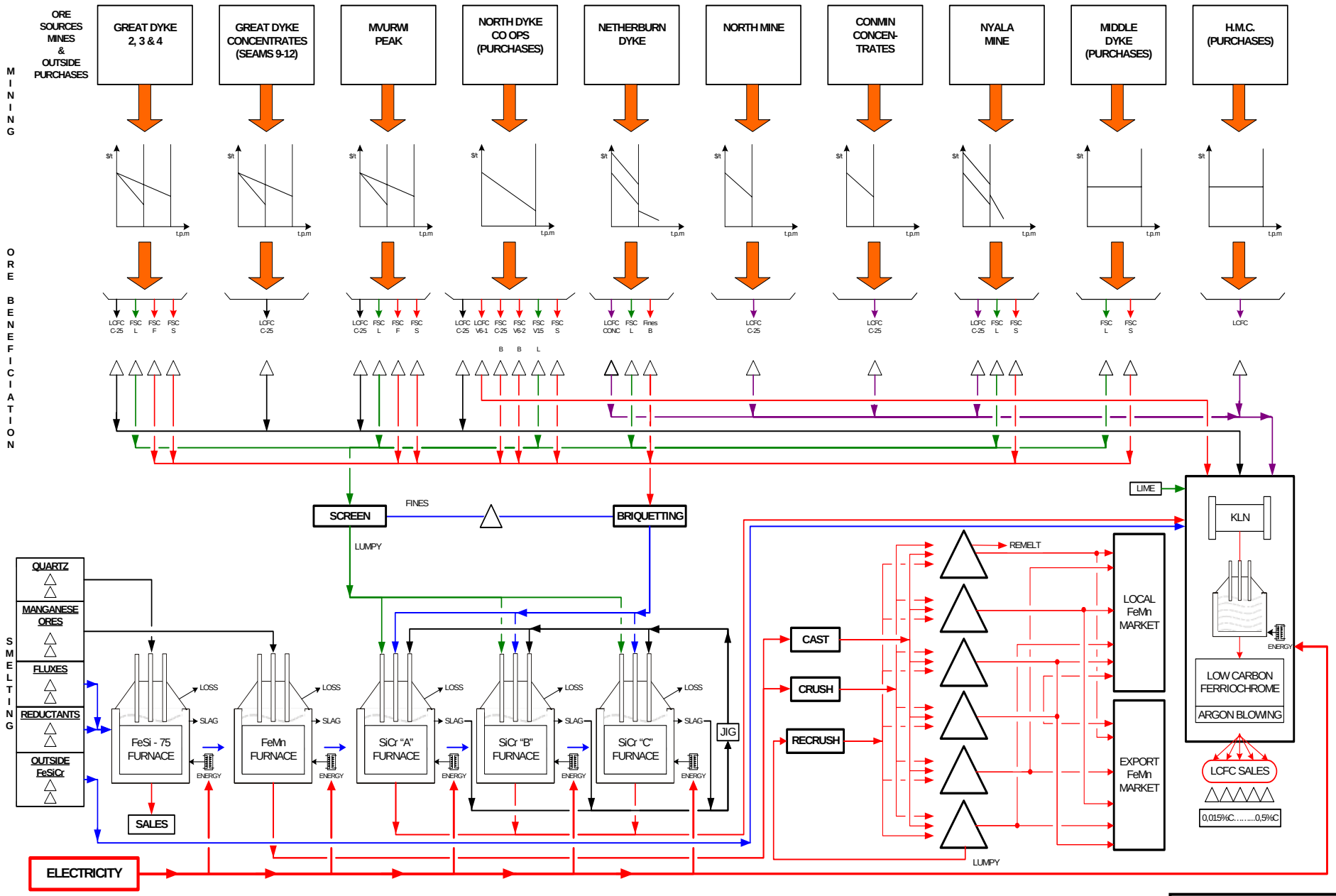

"Large Scale Linear Programming Solutions"
@ Copyright LSLPS
www.lslps.com