GENERALISED PLATINUM GROUP METALS BUSINESS OPTIMISATION / LINEAR AND INTEGER PROGRAMMING MODEL

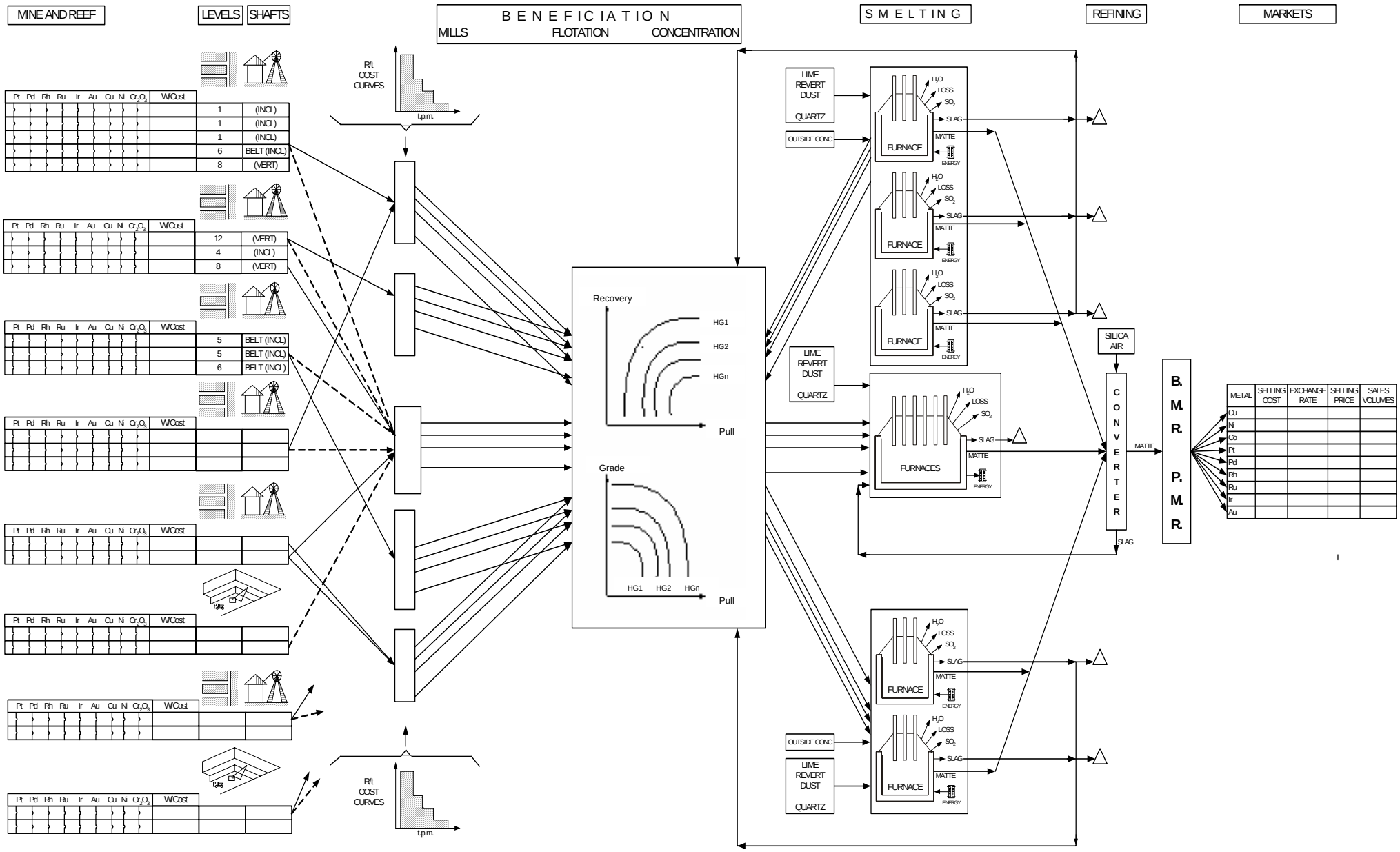

"Large Scale Linear Programming Solutions"
@ Copyright LSLPS www.lslps.com